California Polytechnic State University Pomona
DEPARTMENT OF ELECTRICAL & COMPUTER ENGINEERING

Intro to Microelectronics Laboratory

ECE 2200L
Report #10

LAB 10 – Current-Voltage Characteristics of the Junction Field Effect Transistor

Prepared by
Elias Cortes & Kevyn Santos

Presented to
Aspet Gharakhanian

April 17, 2025

Introduction:

Our objective during this lab is to study the terminal currents and terminal voltages in the JFET. In the first part of the lab we will observe the Transconductance curve in the saturation region. In the second part of the lab we will observe the Current vs Voltage curves for step values of Vgs.

Parts List:

1. Resistors: 100 [Ω], 1 [kΩ], 22 [kΩ], 100 [kΩ]
2. Transistors: 2N3819 (JFET)
3. IC: LM741

Circuit Schematic:

Part 1:

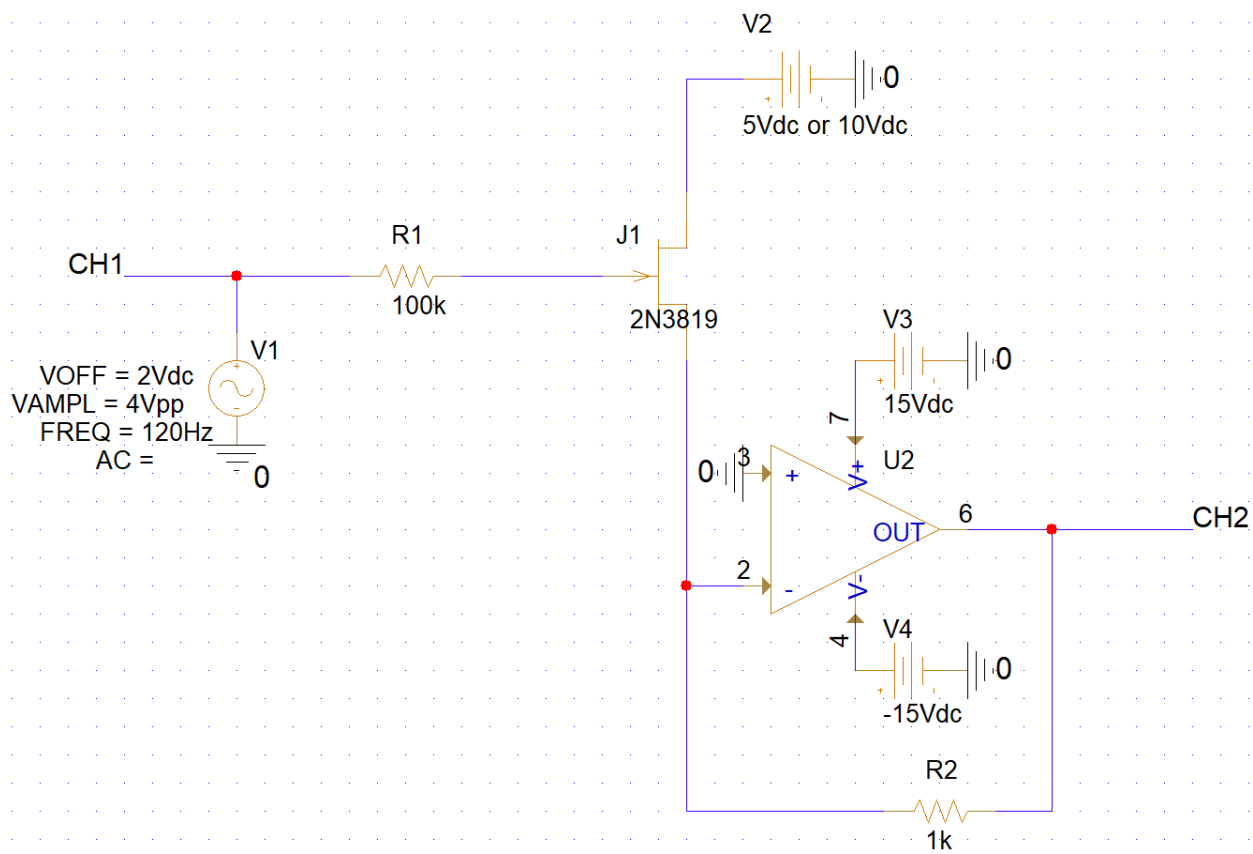

Fig. 1. Circuit schematic followed during Part 1 of the lab.

Part 2:

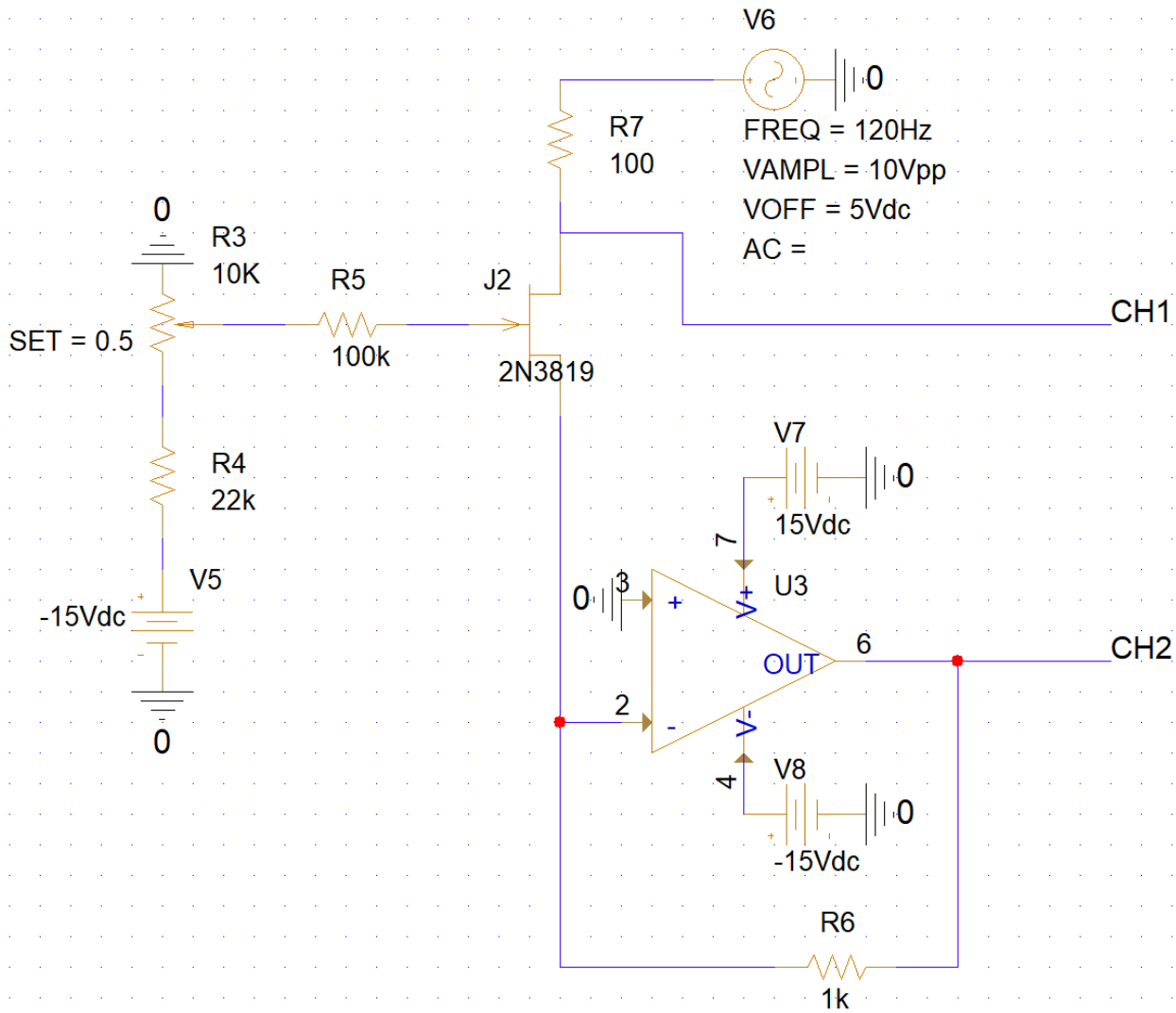

Fig. 2. Circuit schematic followed during Part 2 of the lab.

Experimental Data:

Part 1:

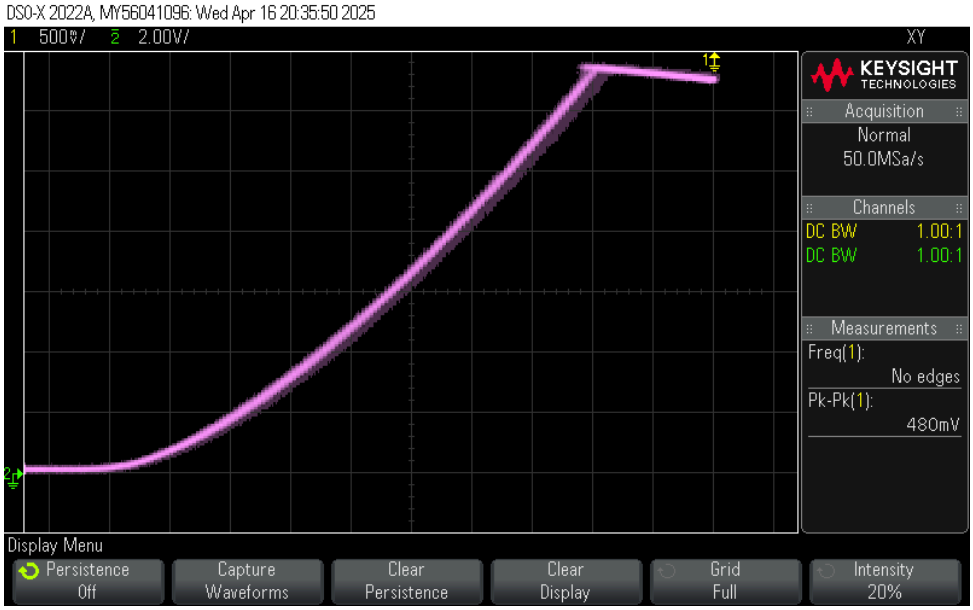

Fig. 3. Oscilloscope capture of I_D vs. V_{GS} graph obtained during Part 1 of the lab.

Part 2:

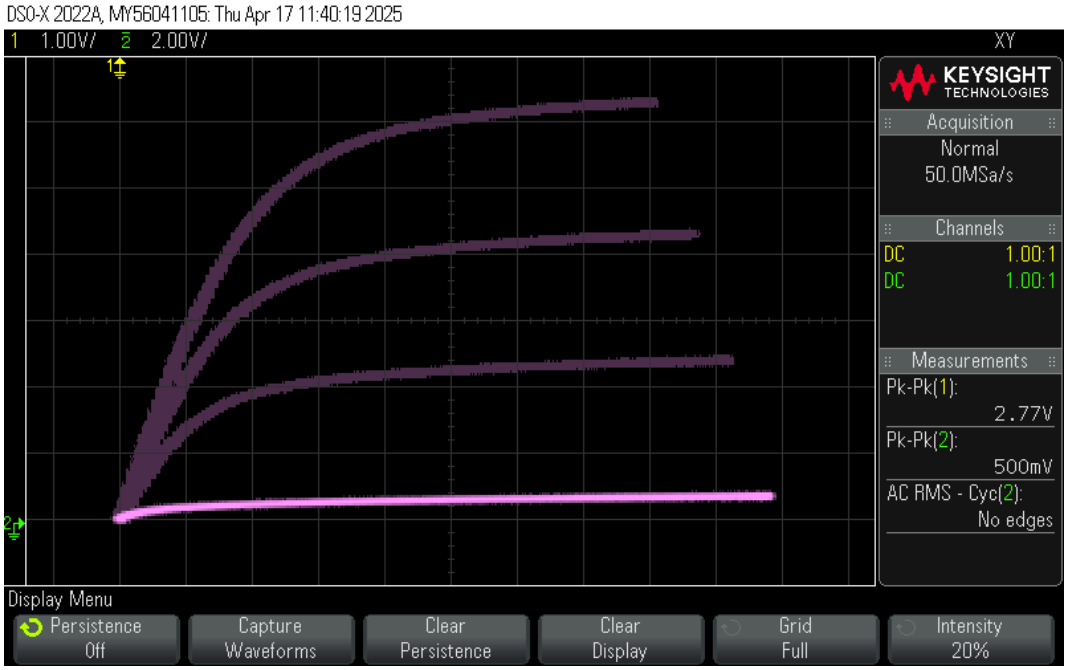

Fig. 4. Oscilloscope capture of I_D vs. V_{DS} graph obtained during Part 2 of the lab.

Post-Lab (work on next page):

Conclusion:

When comparing the transconductance curves with 5V and 10V at the drain we noticed they were very similar and behaved as expected. Our operational amplifier was limiting our current at 12mA which is why it stops and goes kind of flat. Our pinch-off voltage was about -5V which is in the operating range of -0.5V to -8V for the 2N3819. We were also able to determine our I_{DSS} values graphically. We had to do it this way because our op amp was limiting our curve at 12mA. We found I_{DSS} at 5v was 18.4mA and at 10v it was 19.2mA. The I_D vs. V_{GS} curves were very similar as expected. For the second part of the lab, we observed the curve of I_D vs. V_{DS} at different V_{GS} values. From these curves we were able to get the slope, and then obtain our R_{DS}(on) value of 214.29 ohms. This is also within the range of about 100 ohms to 300 ohms. Our lambda values were very small ranging from -0.0179 to -0.131. Overall, this lab went very well and we were able to verify the characteristics of a Junction Field Effect Transistor.